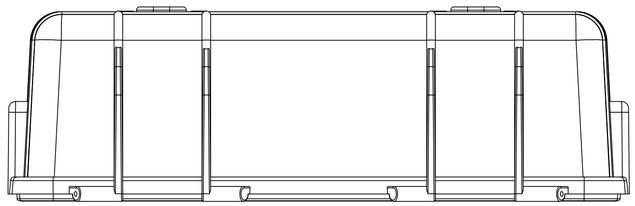

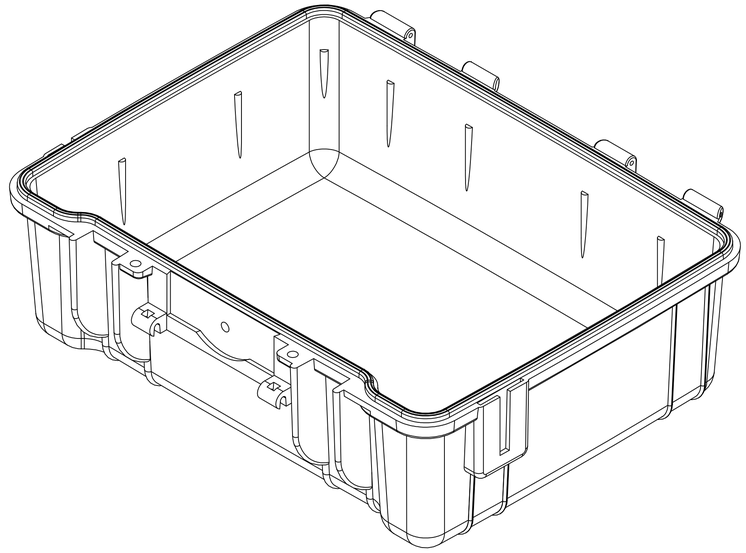

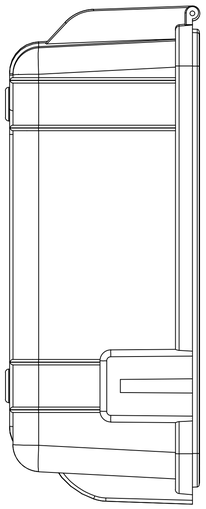

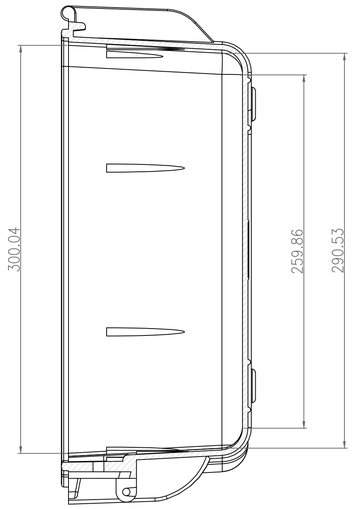

SECTION A-A

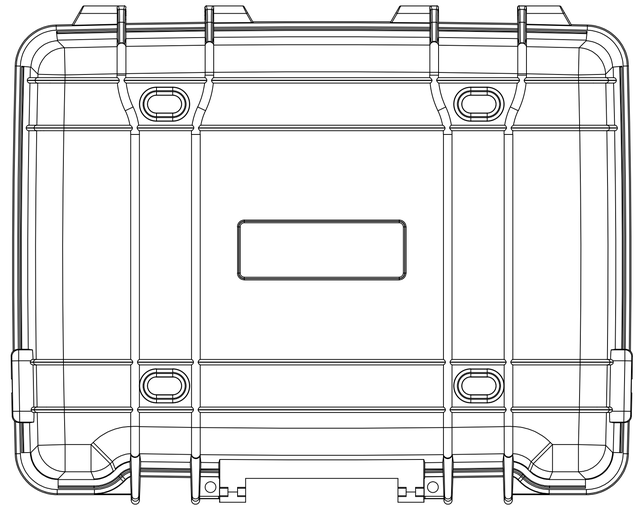

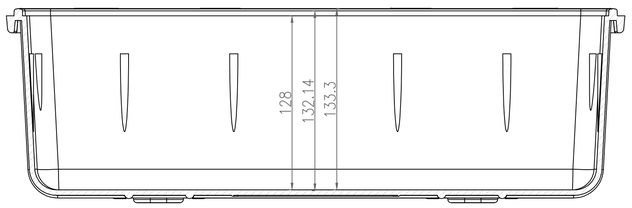

SECTION B-B

					ABS		Dim. tolerance 。X ± 0.10 .XX ± 0.05 Angle tolerance: 10' left:± 0.15	AITOP
Mark	Nr.	The file Nr. changed		Sign	Data			
Design	Sign	Data	Standard	Sign	Data			
NJW						Colour	Quatity / Weight / Scale	
Check							1 / 1:1	PC-4618-Bottom
Technic			Approve			Total: 1	Page: 1	